MASTER GUARD

A Chloride Group Company

Secure Power Always

Series A from 700 to 3000 VA

UPS Catalogue

Important note!

The technical data enclosed is for general information. Please note that the operating instructions and references indicated on the products are for installation, operation and maintenance.

Product designations

All product designations used are trademarks or product names of Chloride Group PLC or its subsidiary companies.

This publication is issued to provide outline information and is not deemed to form any part of any offer or contract. The company has a policy of continuous product development and improvement and we therefore reserve the right to vary any information quoted without prior notice.

Person to contact

MASTER GUARD
A Chloride Group Company

Uninterruptible Power Supply

UPS Catalogue • 2009

Series A from 700 VA to 3000 VA

1. SCOPE 2
2. SYSTEM DESCRIPTION 2
3. DEVICE DESCRIPTION 3
4. GENERAL REQUIREMENTS 4
5. BATTERY MANAGEMENT 4
6. CONTROL PANEL 5
7. REAR SIDE 6
8. INTERFACES & CONNECTIVITY 8
9. MECHANICAL DATA 9
10. TECHNICAL DATA 9
11. OPTIONS 10

1. SCOPE

This document describes a continuous duty single-phase output, on-line double conversion uninterruptible power supply (UPS) system. The UPS shall automatically provide continuity of electrical power, within defined limits and without interruption, upon failure or degradation of the commercial AC source. The continuity of conditioned electric power shall be delivered for the time period defined by the battery system, which will be automatically recharged by the UPS upon restoration of the commercial AC source.

2. SYSTEM DESCRIPTION

2.1 The system

An increasing number of devices are sensitive to disturbances on the mains power supply. The Series A UPS system shall provide high quality AC power for connected equipment and offer the following features:

- Protection against power failures
- Improvement in the power supply quality
- Compatibility with all types of load

Series A shall operate based on DSP-driven Double Conversion technology, as shown in the figure below, and shall provide the following benefits:

- High energy efficiency in power conversion, including ECO mode
- Outstanding output power factor= 0,9 (*)
- Easy-swappable internal batteries, for simplified maintenance without disconnecting the loads
- Advanced battery management, increasing battery life
- Simplified commissioning, thanks to the auto-detection of external battery packs
- User-friendly notification and interaction with the standard front panel with LED indicators and the optional LCD Display
- Intelligent load management provided by the controllable output sockets
- Possibility of operation as frequency converter
- Availability of internal automatic bypass to keep the load fed in the event of a UPS failure, reducing disruption and maximising uptime
- Minimization of mains distortions thanks to the enhanced input power factor correction.

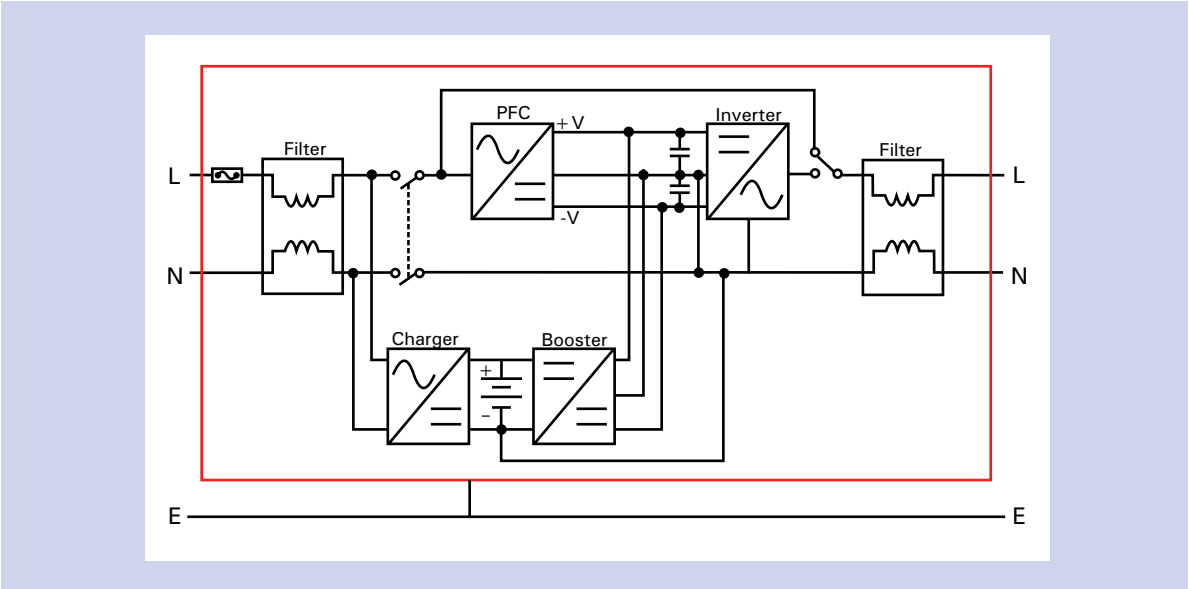

Series A block diagram

2.2 Models available

The Series A product range shall include the following single-phase pluggable models and external battery packs:

UPS Model	Housing	Rating (*)
A700-T	Tower	700VA/630W
A1000-T	Tower	1000VA/900W
A1500-T	Tower	1500VA/1350W
A1000-RT	Rack/Tower	1000VA/900W
A1500-RT	Rack/Tower	1500VA/1350W
A2000-RT	Rack/Tower	2000VA/1800W
A3000-RT	Rack/Tower	3000VA/2700W

Battery Pack	Housing	Compatible UPS
BP-A1000/1500-T	Tower	A1000-T / A1500-T
BP-A1000/1500-RT	Rack/Tower	A1000-RT / A1500-RT
BP-A2000/3000-RT	Rack/Tower	A2000-RT / A3000-RT

(*) These ratings are only valid for the UPS without external battery packs and considering a nominal voltage of 230 V. Check technical data for further details.

3. DEVICE DESCRIPTION

3.1 Components/blocks

CHARGER
The charger includes a temperature compensation which regulates the charging process. When the mains voltage is within tolerances, the charger provides a nominal recharge current up to 1.2A to the batteries. This element is current-limited; therefore, it can only provide the nominal current, although batteries may demand more current. Typical recharge time for internal batteries is 4 hours (for 90% recharge).

INVERTER
The inverter consists of a half-bridge topology which uses high frequency switching technique.
The inverter is protected against output short-circuits and is current-limited.

LOGIC CONTROL BASED ON DSP
Logic control provided by a powerful Digital Signal Processor (DSP) shall sample the output voltage, immediately detecting abnormal voltage conditions and then operating the appropriate commands.

PFC CIRCUIT
The power factor correction circuit provides a very high input current power factor (~0,99), thus reducing the input disturbances and optimizing the energy usage. It also contributes to avoid the introduction of disturbances upstream.

BOOSTER
Thanks to this element, the batteries' voltage is increased up to DC bus voltage for the inverter to provide the pure sinusoidal output when the unit is working on battery mode.

FILTERS
On the one hand, the input filter reduces disturbances coming from mains and sets up the signal for the PFC circuit.
On the other hand, inductances at the inverter output, together with output capacitors, act as a filtering element to obtain the output pure sinusoidal waveform.
Both filters work even if the unit is working in bypass mode.

3.2 Operating modes

START-UP SEQUENCE
When the unit is connected to the mains, it automatically starts to work in bypass mode and thus powers connected loads. To switch to line mode, the user must press the inverter On/Off button. After inverter disconnection through the On/Off button, the unit returns to bypass mode whenever the mains is present.
This sequence allows the load to be fed whenever possible.

LINE MODE
In use, the input AC is converted to DC, and converted back to a pure sinewave. It prevents the load from suffering power line problems (including total loss of input AC power) and corrects the load power factor.
The inverter is constantly synchronised with the input line, thus allowing load transfer from the inverter to the bypass line to power the load in case of overloads or inverter stops.

BATTERY MODE
UPS switches automatically to this mode when detecting a mains failure (and the unit is not in bypass mode). Batteries supply the energy and the user can see the estimated battery runtime by using the software or the LCD display.

BYPASS MODE
In this case, the load is directly fed from the AC mains. It can be forced by the user or activated automatically by the UPS when detecting an overload or other internal failure. This is also the start-up mode.

ECO MODE
If this mode is enabled, the unit will work in automatic by-pass when mains is within tolerances. Otherwise, it automatically switches to line mode (if possible, as the voltage input window is wider in line mode) or to battery mode. A very high efficiency (up to 97%) is achieved in this mode of operation.

FREQUENCY CONVERTER MODE
The unit operates as a frequency converter, providing 50 or 60 Hz at output when the input frequency is within 40-70 Hz. There is a power de-rating (50%) when using this mode. ECO mode and by-pass mode are not accessible from this mode.

The user can activate/deactivate several of these operating modes via LCD Display.

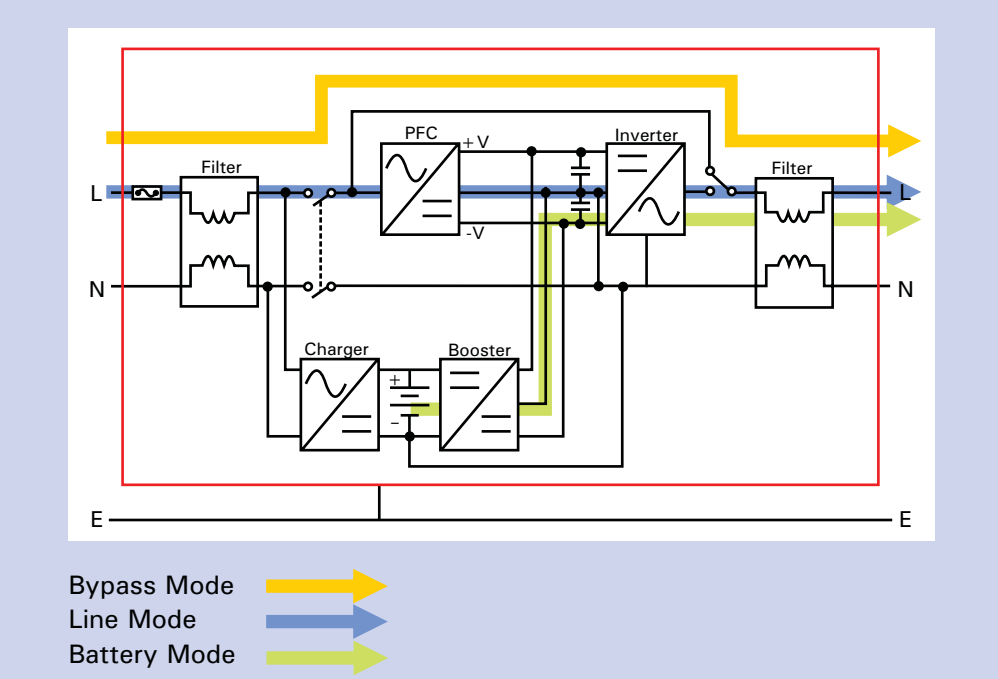

4. GENERAL REQUIREMENTS

4.1 Standards and certifications

MASTERGUARD GmbH is certified by the German TÜV as a company with a quality and environmental management system in accordance with standards ISO 9001 and ISO 14001.

Series A shall carry the CE mark in accordance with the Safety Directive 2006/95/EC and the EMC Directive 2004/108/EC (superseding the 89/336/EEC, 92/31/EC and 93/68/EEC Directives).

Series A is designed and manufactured in accordance with the following international standards:

- EN62040-1-1, EN 60950 (RD); general and safety requirements
- EN62040-2 Class C2, EMC requirements

Series A shall also bear the TÜV and UL/cUL certifications for safety.

4.2 RoHS

Series A voluntarily complies with the requirements of the Directive 2002/95/EC regarding Restriction of the Use of Certain Hazardous Substances (RoHS) in Electrical and Electronic Equipment.

4.3 Neutral/earth

Series A neutral output is not connected to the earth and battery negative voltage is referenced to neutral output.

Series A shall not modify the neutral state, with the exception in battery mode due to the backfeed protection.

5. BATTERY MANAGEMENT

5.1 Battery configurations

Series A shall include the configurations shown in the tables below:
Batteries shall be sealed, lead-acid and maintenance-free. Internal batteries in the UPS are easy-swappable. UPS includes internal protection against overvoltages and deep discharge protection to maximize reliable battery life.

UPS Model	Configuration
A700-T	1x2x7.2Ah (24Vdc 7.2Ah)
A1000-T/A1000-RT	1x3x7.2Ah (36Vdc 7.2Ah)
A1500-T/A1500-RT	1x3x45W (36Vdc 45W)
A2000-RT	1x6x7.2Ah (72Vdc 7.2Ah)
A3000-RT	1x6x45W (72Vdc 45W)

Battery Pack	Configuration
BP-A1000/1500-T	2x3x7.2Ah (36Vdc 14.4Ah)
BP-A1000/1500-RT	2x3x7Ah (36Vdc 14Ah)
BP-A2000/3000-RT	2x6x45W (72Vdc 90W)

Test of battery system shall be run upon user request (via front panel) or at regular intervals (daily, weekly or monthly). These intervals can be configured via LCD display.
A pre-alarm signal shall be activated before the end of battery back-up to alert the operator (BATTERY LOW signal). By default, this signal shall be activated when the remaining battery capacity goes below 25% of the total capacity. This value can be configured by the user (via LCD display) to 25%, 50% or 75%.

An end-of-battery-life alarm shall be activated 4 years after commissioning to alert the operator that batteries should be replaced. This alarm can be deactivated by the operator via front panel.

The UPS shall automatically detect the number of external battery packs connected via communication cables (bundled with the battery packs) interconnected between the UPS and the battery packs. Internal calculations about back-up time are done according to the quantity of battery packs connected. It is recommended a maximum of 4 external battery packs to each UPS.

Additional battery arrangements may be configured, as well as external battery chargers. Please check the details with the local Chloride office for these customized configurations.

5.2 Back-up times

The above battery configurations shall provide the following back-up times.

They are typical back-up times assuming resistive load, batteries fully charged and ambient temperature of 25ºC. These values may vary depending on these conditions. 700 VA model does not allow connection of external battery packs.

700 VA model	110 W	280 W	390 W	560 W
UPS	35 min	15 min	10 min	5 min

1000 VA models	160 W	400 W	560 W	800 W
UPS	37 min	15 min	11 min	6 min
UPS + 1BP	158 min	55 min	38 min	25 min
UPS + 2BP	254 min	97 min	69 min	46 min
UPS + 3BP	397 min	174 min	99 min	67 min
UPS + 4BP	476 min	220 min	161 min	89 min

1500 VA models	240 W	600 W	840 W	1200 W
UPS	25 min	10 min	7 min	3 min
UPS + 1BP	84 min	34 min	24 min	16 min
UPS + 2BP	180 min	62 min	43 min	28 min
UPS + 3BP	234 min	90 min	63 min	42 min
UPS + 4BP	331 min	140 min	83 min	56 min

5. BATTERY MANAGEMENT

2000 VA models	320 W	800 W	1120 W	1600 W
UPS	37 min	15 min	11 min	6 min
UPS + 1BP	163 min	58 min	40 min	27 min
UPS + 2BP	236 min	108 min	73 min	49 min
UPS + 3BP	358 min	177 min	114 min	71 min
UPS + 4BP	445 min	213 min	166 min	96 min

3000 VA models	480 W	1200 W	1680 W	2400 W
UPS	26 min	11 min	7 min	3 min
UPS + 1BP	90 min	37 min	26 min	18 min
UPS + 2BP	182 min	66 min	47 min	31 min
UPS + 3BP	226 min	98 min	68 min	46 min
UPS + 4BP	282 min	150 min	92 min	60 min

5.3 Charger / Recharge process

The charger shall operate when the AC mains supply is available and shall have the following operating parameters:

- Charger voltage: 2.3V /cell
- Charger DC current limitation: 1.2A
- Typical recharge time (for internal UPS batteries): 4 hours @ 90%

Charger will be operating just after AC mains connection (line, ECO, bypass and frequency converter modes) to automatically keep the batteries in a fully charged and optimum operational condition.

For discharge, cut-off voltage will vary from 1.6V to 1.88V, depending on output load and discharge profile.

The battery recharge process shall comprise two stages:

A) In the first stage (constant current), the charger injects 1.2A (maximum) to the batteries until the battery voltage reaches the floating value.
B) Once the floating voltage is reached, the second stage (constant voltage) starts. During this stage, the charger keeps this floating voltage while the charger current decreases.

5.4 Easy-swappable batteries

The UPS internal batteries shall be easy-swappable, allowing the service engineers to replace the batteries without disconnecting the load. It is recommended to switch to bypass mode in this mode. Thanks to this feature, batteries can be replaced without any disturbance or disconnection to the load.

6. CONTROL PANEL

The UPS incorporates the controls and indicators necessary to monitor the system status and performance, so users will be able to take actions where appropriate.

Series A includes a multiple language LCD display for complete UPS monitoring and control. The text is available in English, French, German, Italian, Portuguese and Spanish. Complete access to LCD menu is possible through navigation push buttons located below the screen. The LCD panel may be rotated to fit horizontal and vertical mounting. It contains all actions available through LED panel and includes additional options. A brief summary is shown below:

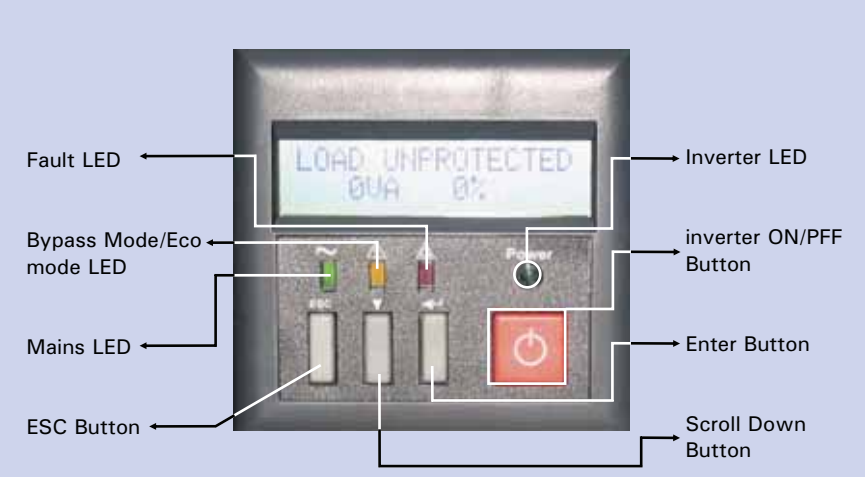

PANEL WITH LCD	
Menus	**Actions**
Control Menu	Enable/disable acoustic alarm and run battery tests.
Status Menu	It shows UPS status, including input/output parameters
Setup Menu	It allows the user to select the language and the output voltage
Logging	It contains a historic log with the most relevant events
About	Information about UPS model and rating
Advanced Options	For settings that may require advanced configuration of the UPS and operation. It is password protected. Most actions are taken through this menu: output frequency selection, turn UPS to bypass (Eco or Line Mode), settings and levels for controllable outlets, cold start, low battery alarm selection, auto-restart function and other actions specified in the user manual (please check for details).

6. CONTROL PANEL

Front panel with LCD display for tower models

Front panel with LCD display for rack/tower models

7. REAR SIDE

The following figures show different rear sides for Series A depending on the housing and power ratings.

All models include RS232 and USB (HID) communication ports, providing the user more flexibility in order to obtain information regarding monitoring.

There are two controllable outlets groups. By using them, the user can maximize the energy usage and prioritize different loads according to their relevance.

RPO/ROO terminals are very useful to shutdown / shutdown and restart the unit remotely, for example when it is difficult to have access to the UPS.

To connect the battery extension to the UPS, the battery cable must be plugged into the socket and into one battery pack connector. Besides this, the RJ11 cable must connect the UPS and the battery pack for auto detection of external battery packs.

Legend:
1. Communication slot
2. Fan
3. Fan (In other models, only one fan)
4. External battery pack connector
5. RJ11 port for battery pack detection cable
6. RS232 port (DB9)
7. Input circuit breaker
8. Input power socket (16A)
9. Not controllable output sockets (10A)
10. Fixing point for sliding rail
11. Controllable outlets (2 groups,10A)
12. 16A output socket
13. ROO/RPO terminals
14. USB port
15. Earth screw

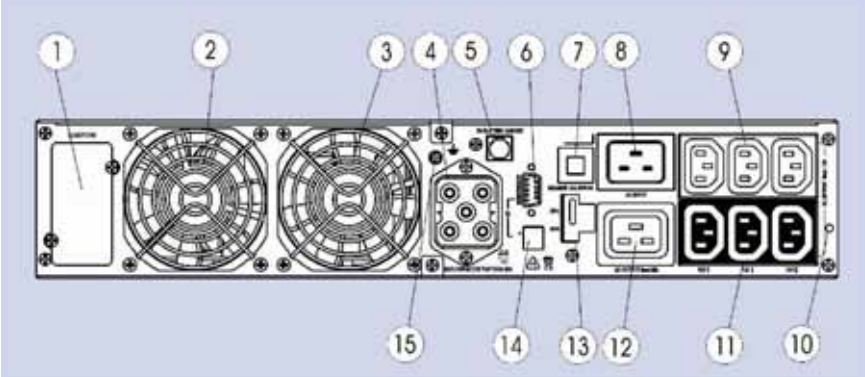

Series A 3000 RT

7. REAR SIDE

Series A Tower 1500

Legend:

1. Communication slot
2. Input circuit breaker
3. Input power socket (10A)
4. Not controllable output sockets (10A)
5. Controllable outlets (2 groups,10A)
6. USB port
7. RS232 port (DB9)
8. Fan
9. External battery pack connection
10. RJ11 port for battery pack detection cable
11. ROO/RPO terminals
12. Earth Screw

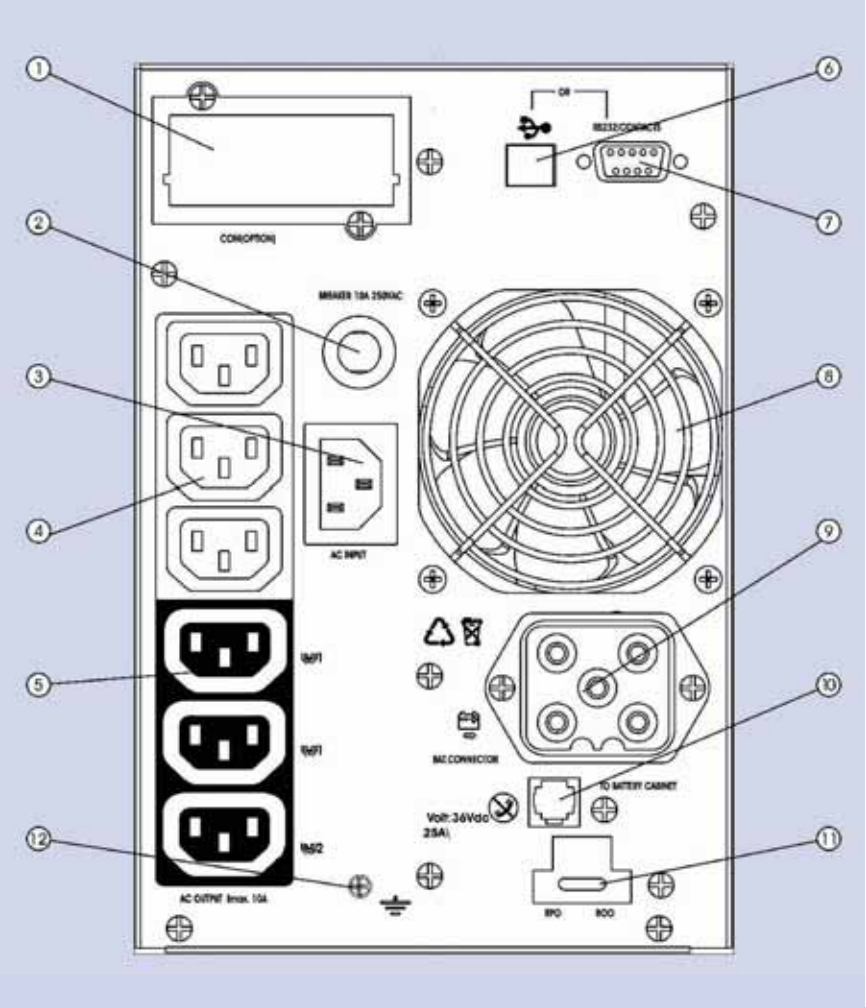

Battery Pack Series A 1000/1500 RT

Legend:

1. Battery pack connector
2. RJ11 ports for battery pack detection cable
3. Battery pack connector
4. Circuit breaker

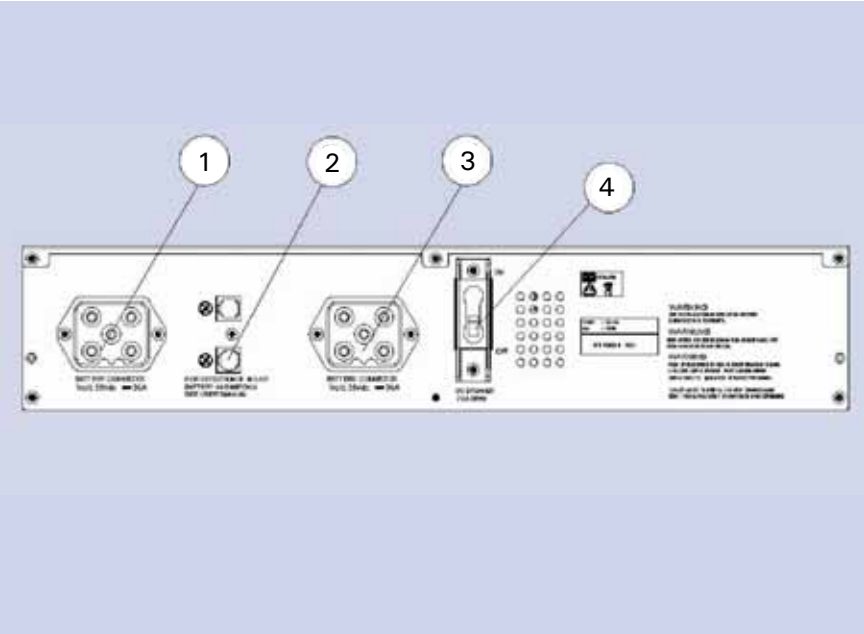

8. INTERFACES & CONNECTIVITY

Series A shall be equipped with DB9 and USB communication ports and a slot for inserting advanced communication cards. These interfaces can be used for:

- Direct communication between UPS and workstation/server
- Integration of the UPS as client into a network with centralized monitoring via a ManageUPS SNMP adapter in the interface slot
- Transfer of operational states to external alarm systems via volt-free contacts (with interface volt-free contact card, available as accessory, in the interface slot).

The necessary communication software packages and interface cables are either bundled with the UPS or available as options. Please refer to the website http://connectivity.chloridepower.com for more details.

8.1 DB9 port (RS232 communication and basic signals)

Series A shall be equipped with a 9-pole SUB-D connector (DB9 port), electrically isolated from all other circuits. This connector shall contain the RS232 signals (RxD and TxD) and 5 output signals. They shall be available as opto-coupled, open collector signals. Pin distribution shall be as indicated in figure "DB9 pin distribution".

8.2 USB port

Series A shall be equipped with a USB communication port for protocol-data transfer. This port shall be classified as HID (Human Interface Device).

8.3 Communication slot

The Series A communication slot may be fitted with various interface cards. Interface cards available as accessories shall come with detailed descriptions enclosed. Available interface cards include SNMP adapters (ManageUPS NET) for connecting the UPS to a TCP/IP network or the volt-free contacts adapter. Please see section 11 for more details. Users are advised to follow carefully the installation guidelines attached to the accessories.

8.4 RPO/ROO

Series A shall be equipped with three terminals for the connection of RPO (Remote Power Off) and ROO (Remote On Off) devices. The terminals shall be located on the rear side of the unit (see section 7 for more details).

The figure "ROO/RPO" shows the pin distribution. The unit comes out of the factory with a wire which connects pins 1 and 2. For normal UPS operation, these pins must be kept connected.
In order to use the Remote Power Off (RPO) functionality, a normally closed volt-free contact has to be inserted between pins 1 and 2. When this contact is open, the UPS will disconnect all loads and shut down. To return to normal operation, it is necessary to close the contact and restart the unit.

In order to use the Remote On Off (ROO) functionality, a normally closed volt-free contact has to be inserted between pins 2 and 3, while keeping the pins 1 and 2 interconnected. When the contact between 2 and 3 is open, the UPS will disconnect all loads. After that, if the contact is closed the unit will restart and restore power to the connected loads.

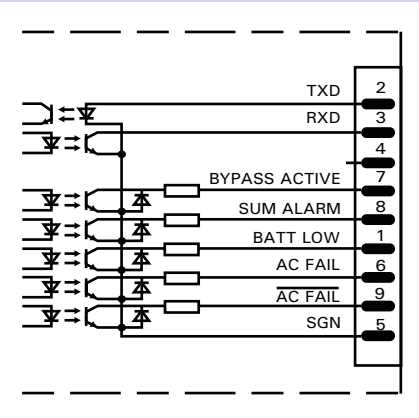

DB9 pin distribution

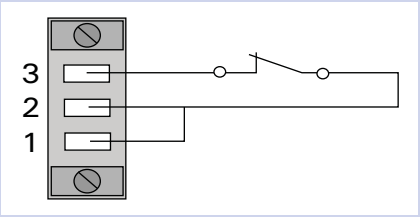

ROO

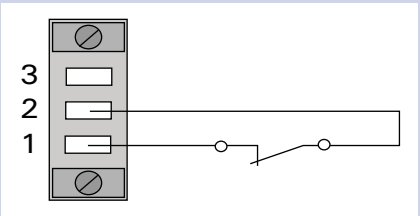

RPO

9. MECHANICAL DATA

9.1 Enclosure

The UPS shall be housed in an enclosure with removable front panels (UPS internal batteries shall be accessible from the front panel) and IP20 protection. Standard colour of the enclosure shall be RAL7016 (grey anthracite), thus providing an optimum alternative for most environments.

9.2 Ventilation

Forced air cooling shall ensure that all the components are operated within their specification. Airflow shall be controlled according to load demand. The cooling air entry shall be on the front panel and the air exit on the rear side.

9.3 Installation of rack/tower units

The rack/tower units can be rack-mounted into 19" cabinets or installed as tower (floorstanding). The required mounting elements for both situations are either bundled with the units or available as options.

10. TECHNICAL DATA

	A700-T	A1000-T	A1000-RT	A1500-T	A1500-RT	A2000-RT	A3000-RT
UPS Rating	700 VA	1000 VA		1500 VA		2000 VA	3000 VA
Housing	Tower	Tower	Rack/Tower	Tower	Rack/Tower	Rack/Tower	Rack/Tower
Technology	Advanced on-line double conversion						
Output Power[1] (VA/W)	700/630	1000/900		1500/1350		2000/1800	3000/2700
INPUT							
Nominal input voltage (VAC)	200 - 240 V						
Operative input voltage range @ nominal power(VAC)	From nominal voltage -10% to 284 V						
Maximum operative input voltage range	120 - 284 V					140 - 284 V	
Operative input voltage range in ECO/bypass mode (VAC)	191 - 264 V						
Nominal input frequency (Hz)	50/60Hz auto-selection						
Operative input frequency range (Hz)	50/60Hz +/-5% (40-70Hz in Frequency Converter Mode)						
OUTPUT							
Nominal output voltage[2] (VAC)	200 / 208 / 220 / 230(default) / 240 V						
Voltage regulation (%)	3%						
Output frequency (Hz)	50/60Hz ±0,5% (same as input or selectable in Frequency Converter Mode)						
BATTERIES							
Type	Sealed maintenance-free lead acid (VRLA)						
Battery management	Advanced battery care and external battery pack autodetection						
Typical autonomy[3]	8 min	9 min		6 min		9 min	6 min
GENERAL							
Efficiency in line mode[4] (%)	86%	86%		86%		88%	90%
Typical acoustic noise in on-line mode (dBA)	39	39	40	39	40	46	46
Inrush current	6*Imaxpk<1 ms						
CONNECTIVITY							
Communication Ports[5]	RS232/USB / status signals						
Communication Slot	1 slot for SNMP or volt-free contacts card						
Remote Power Off (RPO)	Yes						
Remote On/Off (ROO)	Yes						
ENVIRONMENTAL							
Operating temperature	0 - 40 °C						
Storage temperature	-15°C / +40°C						
Altitude & Relative humidity	0-3000m / 20% to 90% (non condensation)						
MECHANICAL							
Size (WxHxD, mm)	157x245x438	157x245x438	438x86.5(2U)x482	157x245x488	438x86.5(2U)x482	438x86.5(2U)x657	438x86.5(2U)x657
Weight (kg)	12.3	15	17.9	17.6	20	26	31

(1) Output power with external battery packs is: 1000 VA models: 1000 VA/800 W, 1500 VA models: 1500 VA/1200 W, 2000 VA models: 2000 VA/1600 W, 3000 VA models: 3000 VA/2400 W. For 200, 208 and 220 Volts the output power factor is 0.8.
(2) For output nominal voltages 200 V and 208 V, there is a power de-rating of 20% and 10% (the unit's nominal power is reduced by 20% and 10%) respectively.
(3) Considering an output resistive load of 75%, 0.8 output power factor and batteries fully charged
(4) These values have been rounded.
(5) Both ports cannot be used simultaneously.

Note: The information shown in the table above corresponds to a nominal voltage of 230 V. For other conditions, please check specification.

10. TECHNICAL DATA

CONNECTIONS		
Input	1 x IEC320 C14 (10A)	1xIEC320C20(16A)
Output	6 x IEC320 C13 (10A), 2 groups controllable	6xIEC320C13(10A), (2groups contr.) 1xIEC320C19(16A)
NORMATIVES		
CE Mark	Yes	
Safety	EN 62040-1-1, EN 60950 (RD), TÜV, CB report, UL/cUL	
EMC	EN62040-2, class C2	
Performance	EN62040-3	

Battery Packs	**BP-A1000/1500-T**	**BP-A1000/1500-RT**	**BP-A2000/3000-RT**
Housing	Tower	Rack/Tower	Rack/Tower
Battery arrangement	2x3x7,2Ah (36Vdc 14.4 Ah)	2x3x7Ah (36Vdc 14 Ah)	2x6x45W (72Vdc 90W)
Protection	Breaker 70A/80Vdc	Breaker 70A/80Vdc	Breaker 70A/80Vdc
MECHANICAL			
Size (WxHxD, mm)	157x245x438	438x86.5(2U)x482	438x86.5(2U)x657
Weight (kg)	20	25.4	43.7
ENVIRONMENTAL			
Operating temperature	0 - 40 °C		
Storage temperature	-15 °C / +40 °C		
Altitude	0-3000m		
Relative humidity	20% to 90% (non condensation)		

11. OPTIONS

11.1 ManageUPS NET adapter

ManageUPS NET adapter shall include a complete package allowing the monitoring and control of Series A over the network using TCP/IP protocol. The adapter shall allow:

- UPS monitoring from a network management station using SNMP
- UPS monitoring from a PC using a web browser
- E-mail notification of events

ManageUPS NET for Series A shall fit into the slot at the rear side of the unit.

For more details, please refer to Chloride's Connectivity Solutions literature.

11.2 Volt-free contacts card

The Isolated Contacts Interface Card is an auxiliary interface card which provides isolated dry (volt-free) contact signals which indicate:

- Mains failure
- Battery low
- Bypass on
- Summary alarm

In addition, there is an input shutdown signal which will turn off the UPS inverter system.

The following table shows the card's pin distribution, being valid for the IF-ISOBASIC-02 optional card.

This interface card shall fit into the slot at the rear side of the unit.

Users are advised to follow carefully the installation guidelines attached to the accessory.

ManageUPS NET adapter

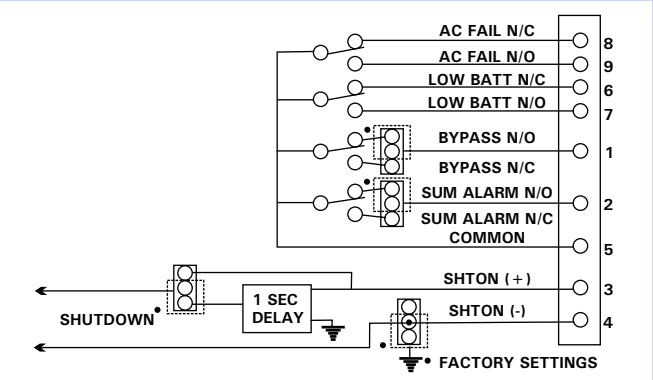

Volt-free contacts card pin distribution

11. OPTIONS

11.3 ManageUPS CIO

Series A shall be compatible with ManageUPS CIO software.

ManageUPS CIO is software for the Management Workstation element in a system for managing UPS and related critical infrastructure in large facilities, campus or enterprise network environments. It shall provide tools for:

- Alarm monitoring: a central console for visualizing and investigating incidents and alarm conditions from network-attached UPS
- Asset management: tools for managing a population of UPS devices as an asset (inventory), including asset ageing summary, battery maintenance forecasting, capacity in use audit, asset inventory by power rating or manufacturer, incident/alarm trend analysis, etc

For more details, please refer to Chloride's Connectivity Solutions literature.

11.4 MopUPS Professional

MopUPS Professional is optional software for Series A. Its primary function is the safe shutdown of the operating system of an unattended computer in the event of a power failure. All files will be closed and directory pointers will be written to disk while the system operates from UPS battery power.

MopUPS Professional shall provide this function as well as other services useful to network administrators including:

- Automated responses to a variety of events: e-mail, messaging, paging, running script files, etc
- Logging of various events and status information to files
- Real time viewing of site power and UPS status information
- Administrative shutdown for scheduling planned system shutdowns
- Control of UPS performance features
- Remote access and monitoring of UPS attached to remote servers on the network using TCP/IP

For more details, please refer to Chloride's Connectivity Solutions literature.

11.5 Others

Several other items are available as options:

- Sliding rails for rack-mounting on 19” cabinets
- Plastic trays for allocation of UPS internal batteries
- Battery extension cables

Elements required for UPS functioning which are not available as options are bundled with the units (power cables, communication cables, plastic feet for floor-standing mounting of rack/tower models, ears for rack-mounting of rack/tower models…).

NOTE

MASTER GUARD
A Chloride Group Company

www.masterguard.de

For a full list of contacts please visite our website at **www.chloridepower.com**

MKA4LOUKAG4MG

TÜV PRODUCT SERVICE

Certificate No. EMS 76732 *Certificate No.* FM 11043